文件資料管制 文件資料管制 文件資料管制

SPI Electronic Co., Ltd.

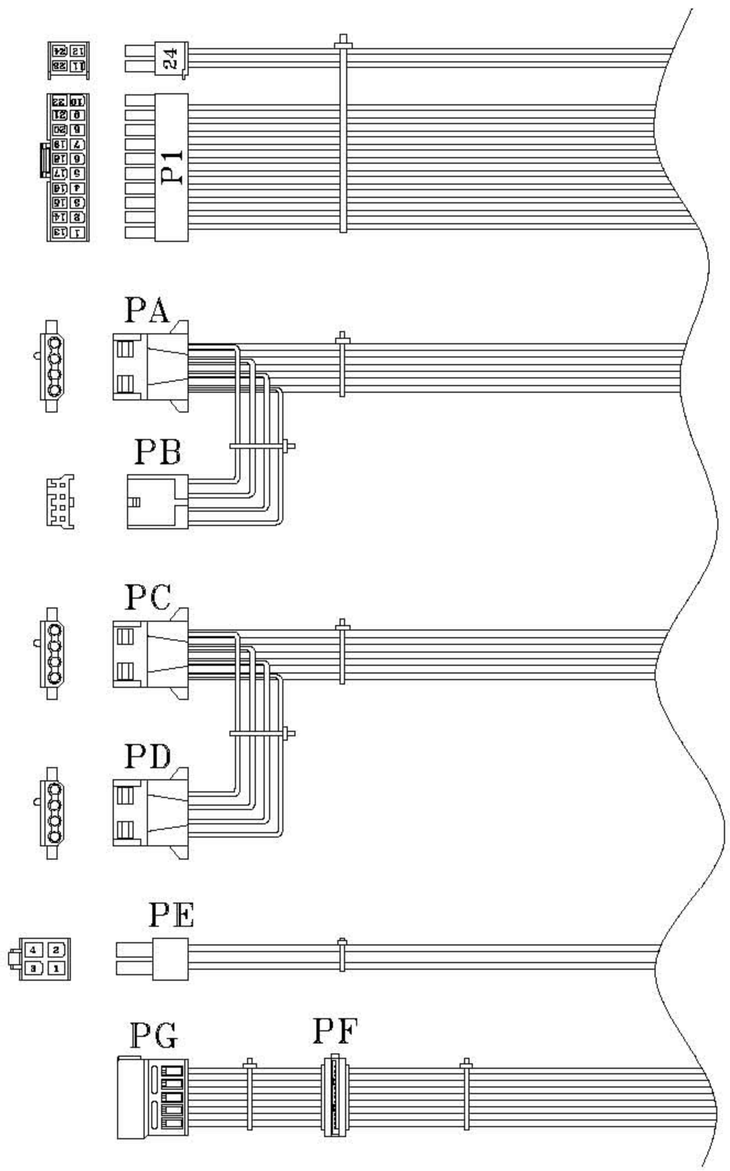

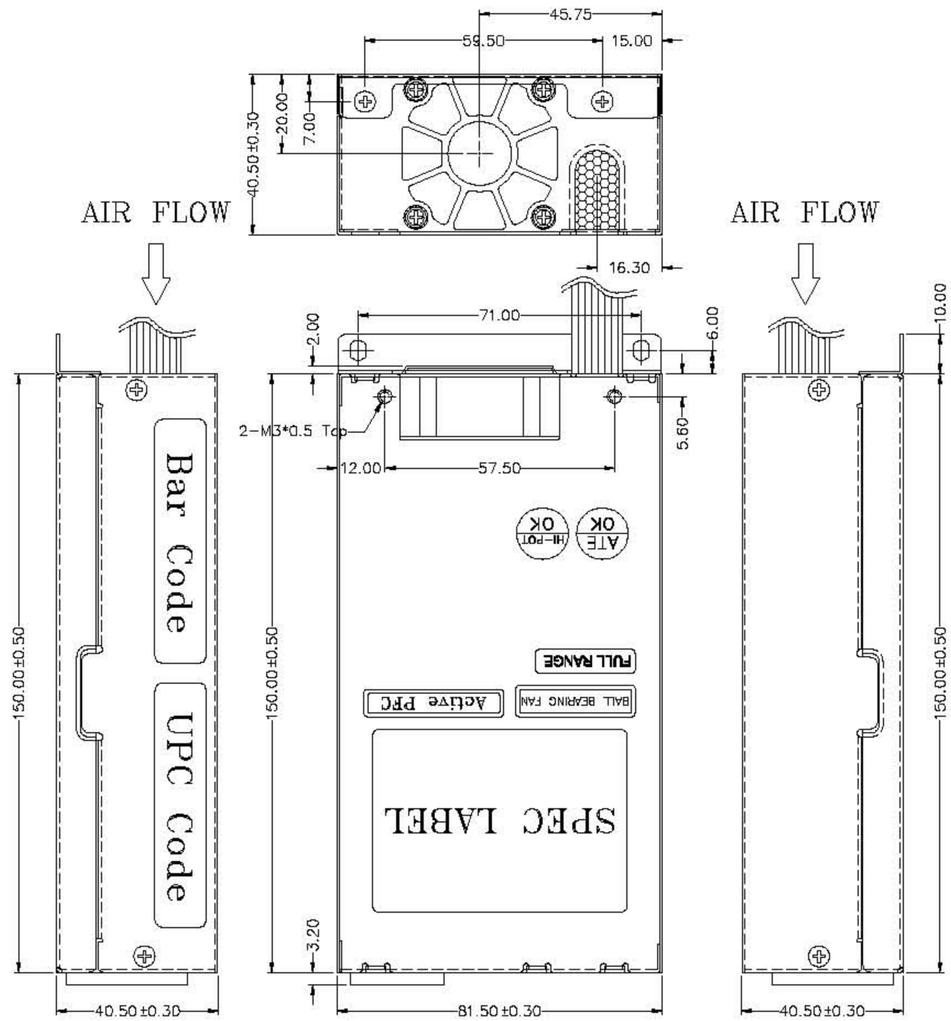

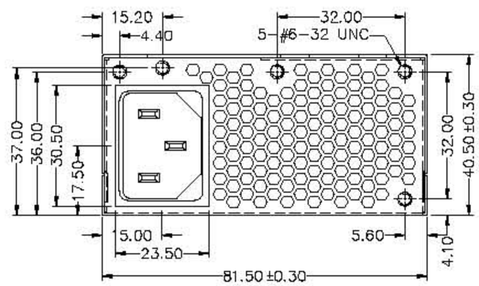

REF. D.	PIN NO.	SIGNAL	WIRE COLOR	GAUGE	CONNECTOR TYPE	LENGTH
P1/24	1	+3.3V	ORANGE	20	JWT C4202H02-A20P+ C4202H02-A4P+ OR EQUIV	200±15 mm
	2	+3.3V	ORANGE	20		
	3	COM	BLACK	20		
	4	+5V	RED	20		
	5	COM	BLACK	20		
	6	+5V	RED	20		
	7	COM	BLACK	20		
	8	PW-OK	GRAY	24		
	9	+5Vsb	PURPLE	20		
	10	+12V2	YELLOW	20		
	11	+12V2	YELLOW	20		
	12	+3.3V	ORANGE	20		
	13	+3.3V	ORANGE	20		
		+3.3VS	BROWN	24		
	14	-12V	BLUE	24		
	15	COM	BLACK	20		
	16	PS-ON	GREEN	24		
	17	COM	BLACK	20		
	18	COM	BLACK	20		
	19	COM	BLACK	20		
	20					
	21	+5V	RED	20		
	22	+5V	RED	20		
	23	+5V	RED	20		
	24	COM	BLACK	20		
PA	1	+12V2	YELLOW	20	AMP 1-480424-0 or EQIV.	250±15 mm
	2	COM	BLACK	20		
	3	COM	BLACK	20		
	4	+5V	RED	20		
PC	1	+12V2	YELLOW	20	AMP 1-480424-0 or EQIV.	310±15 mm
	2	COM	BLACK	20		
	3	COM	BLACK	20		
	4	+5V	RED	20		
PB	1	+12V2	YELLOW	20	AMP 171822-4 or EQIV.	150±10 mm
	2	COM	BLACK	20		
	3	COM	BLACK	20		
	4	+5V	RED	20		
PD	1	+12V2	YELLOW	20	AMP 1-480424-0 or EQIV.	150±10 mm
	2	COM	BLACK	20		
	3	COM	BLACK	20		
	4	+5V	RED	20		
PE	1	COM	BLACK	20	MOLEX 39-01-2040 or EQUIV.	310±15 mm
	2	COM	BLACK	20		
	3	+12V1	Yel/Blk	20		
	4	+12V1	Yel/Blk	20		
PF	1	+12V2	YELLOW	20	CI1271HS0-15P or EQUIV.	310±15 mm
	2	COM	BLACK	20		
	3	+5V	RED	20		
	4	COM	BLACK	20		
	5	+3.3V	ORANGE	20		
PG	1	+12V2	YELLOW	20	CI1270H00-15P or EQUIV.	150±10 mm
	2	COM	BLACK	20		
	3	+5V	RED	20		
	4	COM	BLACK	20		
	5	+3.3V	ORANGE	20		

FSP P/N.:9PA2700702

SPI P/N.:SPI270LE

NOTE:

1. ALL THE LENGTH OF OUTPUT WIRES EXCLUDE HOUSING.
2. 產地標籤依業務指示加貼.

1 線材更改

UNIT:mm

MODEL NO. : SPI270LE (S03002)		TITLE: ASSY	SHEET: 1 OF 1	REV:01
R&D	PE	DRAWN	DATE	
			Nov.29.2006	
INTERIOR COUNTERSIGN:			樂家龍	

Mechanical Drawing(外觀/機構圖)表單編號7000P-0111

發行時間：2006/11/30 3:26 下午
OAD0607251 4-R1.pdf
1 / 1禁止翻印外洩